2CH/4CH (1505-58266-01)
PREAMP CARD-REAR (DC2)

DRAWING REVISION RECORD				
REV	ECO #	DESCRIPTION	DATE	REV BY
01-A		PROTOTYPE		
02-A		DVT ADDED C1,C2,R1,R2, SETUP CARD ON PANEL 3X5 ARRAY	9-03-13	R D
03-A		PVT CHG PCB S/M COLOR TO BLK, HOLE DIA CHG (POTS)		dale.harbaugh@rockfordcorp.com

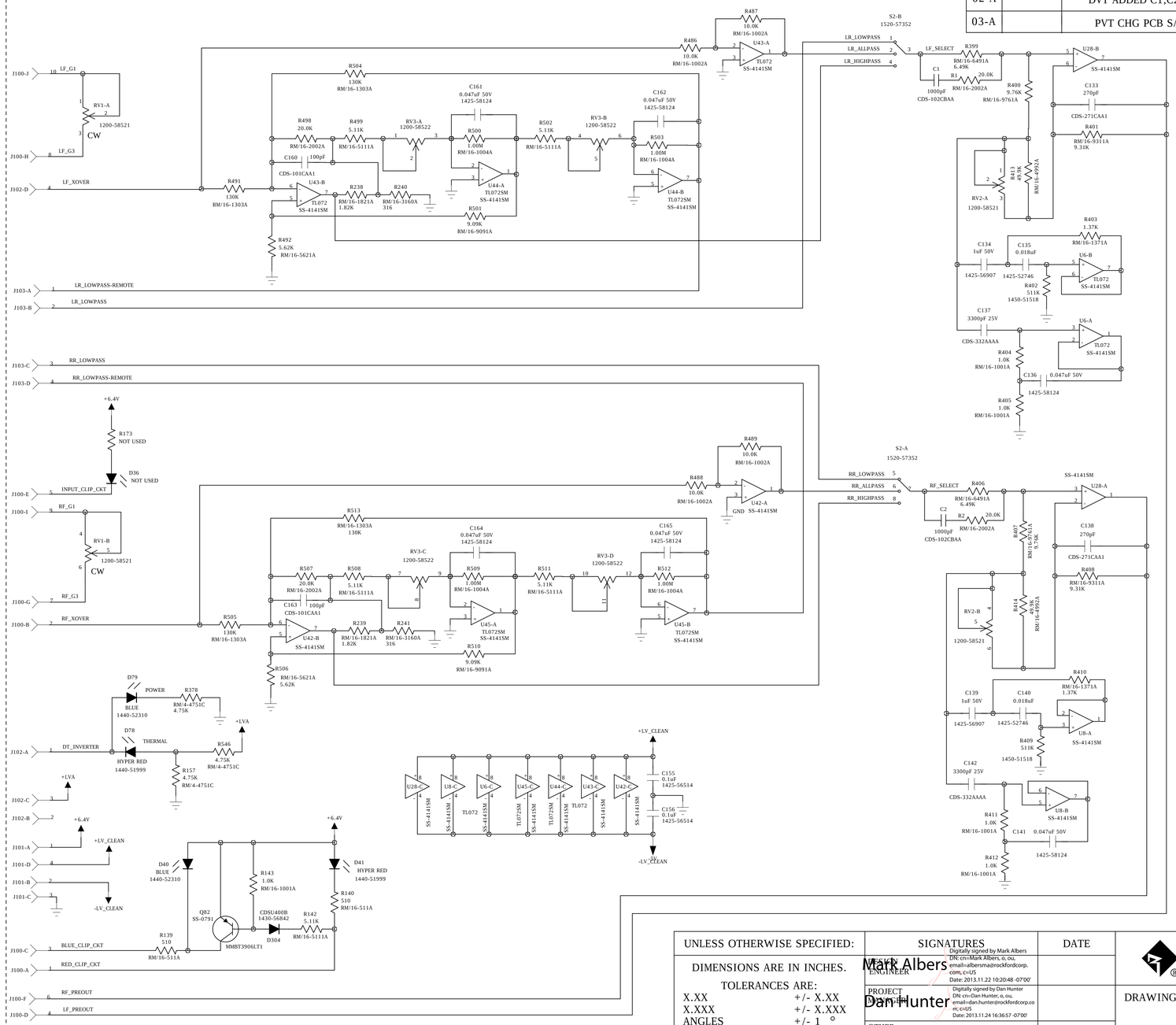

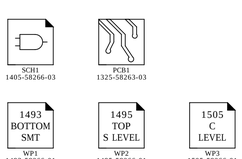

UNLESS OTHERWISE SPECIFIED:	SIGNATURES	DATE
DIMENSIONS ARE IN INCHES. TOLERANCES ARE: X.XX +/- X.XX; X.XXX +/- X.XXX; ANGLES +/- 1 °; CONCENTRICITY +/- X.XX; SURFACE FINISH XX	DRAWN Mark Albers — Digitally signed by Mark Albers DN: cn=Mark Albers, o, ou, email=albersma@rockfordcorp.com, c=US Date: 2013.11.22 10:20:48 -07'00'	
	ENGINEER	
	PROJECT ENGINEER Dan Hunter — Digitally signed by Dan Hunter DN: cn=Dan Hunter, o, ou, email=dan.hunter@rockfordcorp.com, c=US Date: 2013.11.24 16:36:57 -07'00'	
	OTHER	

CONFIDENTIAL
COPYRIGHT 2004 ROCKFORD CORPORATION
THIS DRAWING IS THE PROPERTY OF ROCKFORD CORPORATION AND EMBODIES CONFIDENTIAL INFORMATION, TRADE SECRET INFORMATION, AND/OR KNOW-HOW WHICH IS THE PROPERTY OF ROCKFORD CORPORATION. BY ACCEPTING THIS DRAWING, THE RECIPIENT AGREES NOT TO PROVIDE, OR OTHERWISE MAKE AVAILABLE, THE DRAWING, OR ANY INFORMATION OR KNOW-HOW EMBODIED THEREIN, TO ANY THIRD PARTY WITHOUT PRIOR WRITTEN AUTHORIZATION.

ROCKFORD CORPORATION
600 SOUTH ROCKFORD DRIVE
TEMPE, AZ. 85281 U.S.A.
PHONE: (800) 366-2349
FAX: (480) 966-3983

DRAWING TITLE:
SCHEMATIC-RF-2K14-T400X4AD
PREAMP CARD (REAR)

SIZE	FILE NAME:	DWG/PART NO:	REV
B	1405-58266-03-A.SCH	1405-58266-03	A

SCALE: XX.XX:XX | DO NOT SCALE DRAWING | SHEET 1 OF 1